EN WO8905-B | WO8905-W
GU10 spotlights Eira

Thank you for purchasing our spot lighting fixture, which is designed for GU10 bulbs. Before installing and using the fixture, please read these instructions carefully and pay attention to the safety warnings and instructions. This will ensure not only personal safety but also the long-term durability of the fixture. Do not repair or modify the fixture; installation must only be carried out by a qualified technician.

Package contents
User manual, pack of screws and wall plugs, product

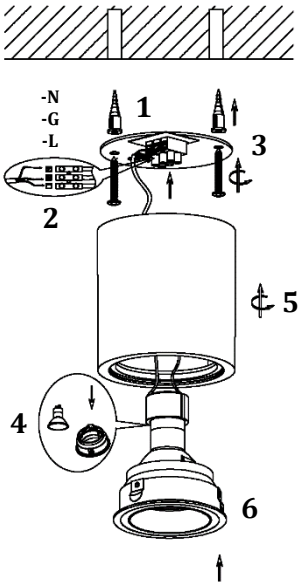

Installation
Disconnect the power supply before installation!
1. Feed the power cable through the opening in the unscrewed base plate
2. Connect the power cable to the terminal block, ensuring the connections are correct (the wiring diagram is shown on the panel beneath the terminal block)
3. Insert the wall plugs into the pre-drilled holes and screw the base plate into position
4. Screw the GU10 bulb into the socket
5. Screw the body to the base plate and remove the bottom cover
6. Attach the bottom cover to the bulb using the metal feet
7. Snap the bottom cover into the body of the product
8. Adjust to the desired angle

Switch on the power supply

Warning
- Installation must only be carried out by a qualified electrician.
- Power supply: 220–240 V AC 50/60 Hz.
- For indoor use only.
- Do not dismantle or repair the device.
- There are no replaceable parts in the device.

A CE Declaration of Conformity has been issued for the product in accordance with applicable regulations. Available on request from the manufacturer: info@solight.cz, or downloadable from www.solight.cz.

Solight Holding, s.r.o., Na Brně 1972, Hradec Králové 500 06, Czech Republic.